GMV Medium Voltage

Generating Sets 800 - 3000 kVA

Diesel 1500-1800 RPM

50Hz 3.3kV - 6/6.3/6.6kV - 10/11kV

60Hz 4kV - 7.2/11.4kV - 12.4/13kV

ELCOS
POWER GENERATORS

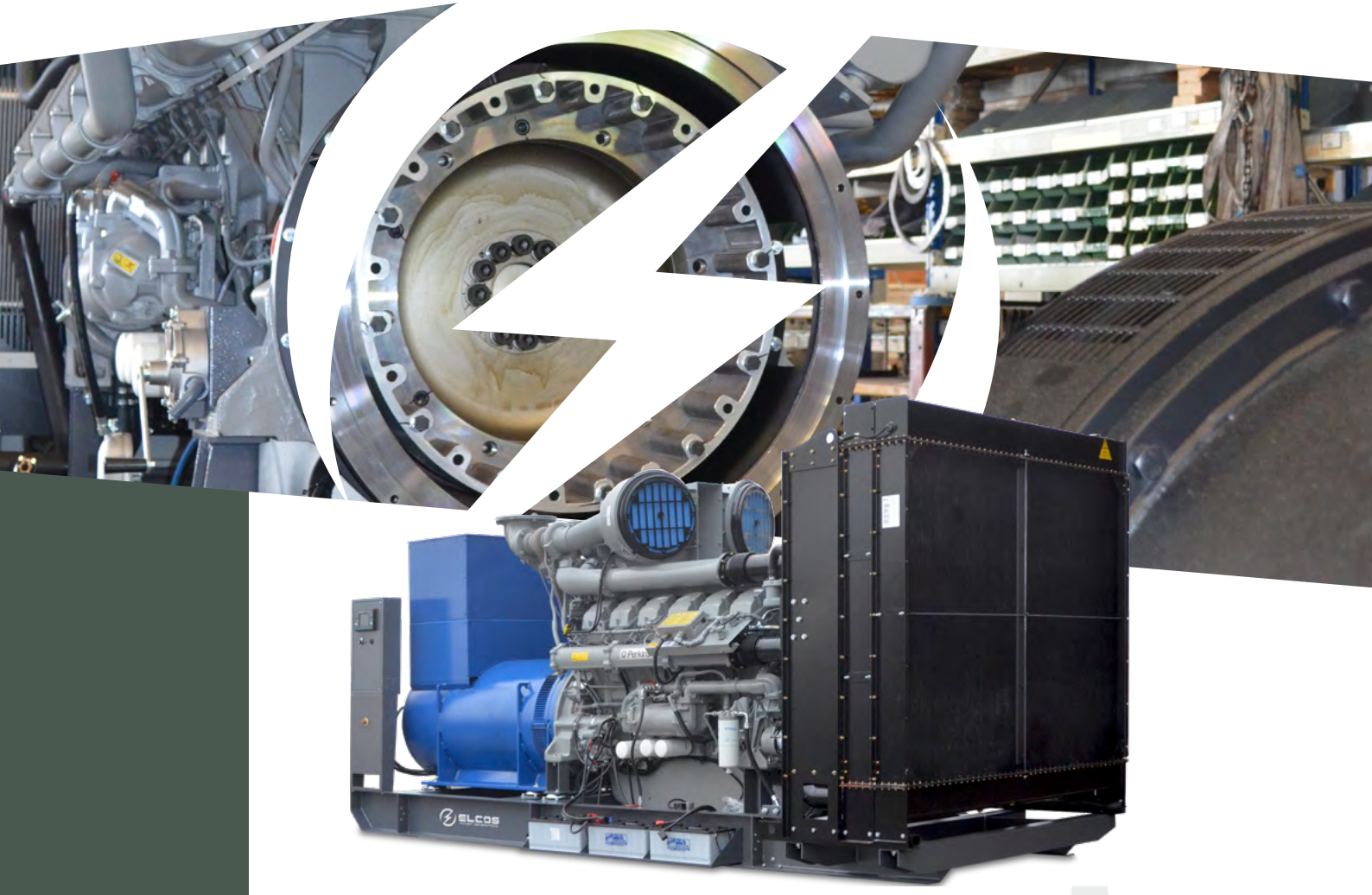

Wide range of medium voltage

Fully factory tested and certified

Generating sets designed to offer power supply solutions

The GMV series generators offer a wide range of power and engine brands

www.elcos.net

GMV.BF

Power range 800-3000 kVA

Diesel 1500-1800 RPM

50Hz 3.3kV - 6/6.3/6.6kV - 10/11kV

60Hz 4kV - 7.2/11.4kV - 12.4/13kV

EU Standards Compliant

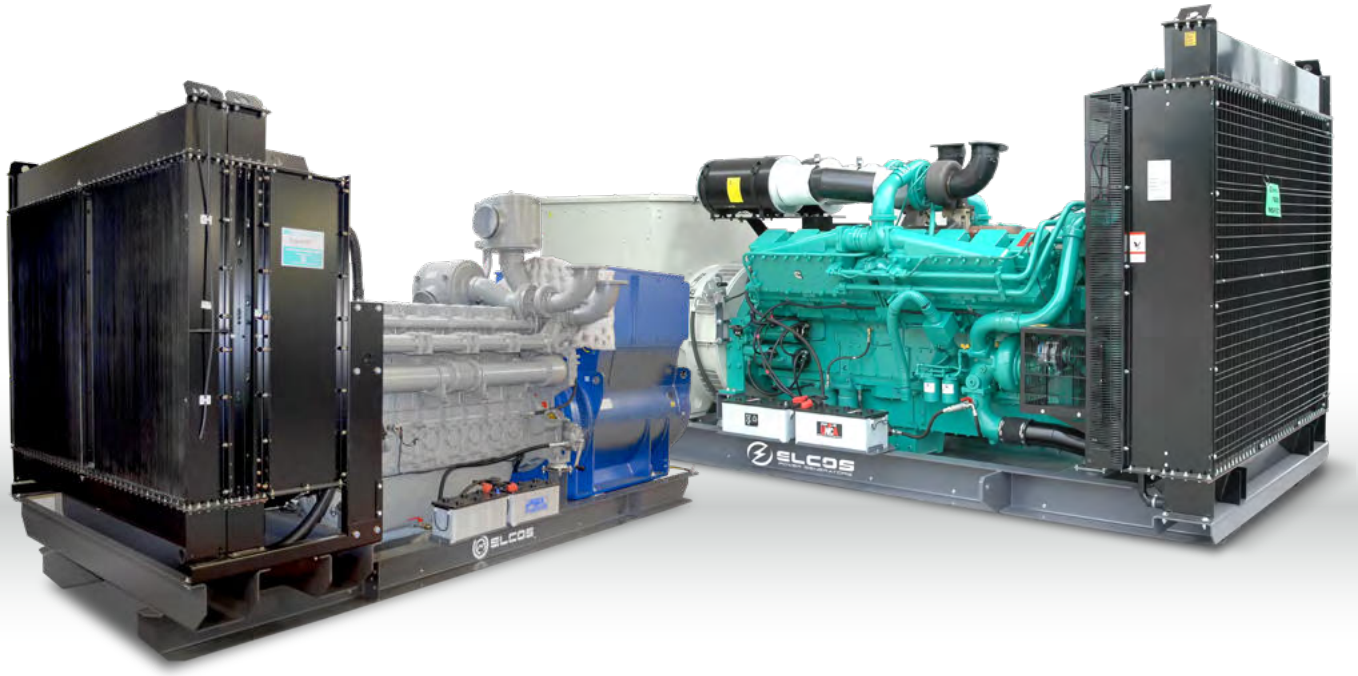

Medium voltage Generators for genset room or Containers.

The GMV range offers solutions for medium-voltage systems with a wide range of voltages to satisfy the growing technical requirements, coming from our customers around the world. They can be readily integrated with any onsite distribution system to create a complete power plant.

Safe for the operator and easy to maintain.

All operations, such as use, commissioning and maintenance are carried out in complete safety, thanks to all the protection devices.

Fully customizable to fit all needs.

Thanks to a wide range of accessories we can configure the generator to be perfectly suited to your needs.

Engine and Alternator Brands

mtu Perkins Cummins MITSUBISHI | mecc alte MarelliMotori STAMFORD

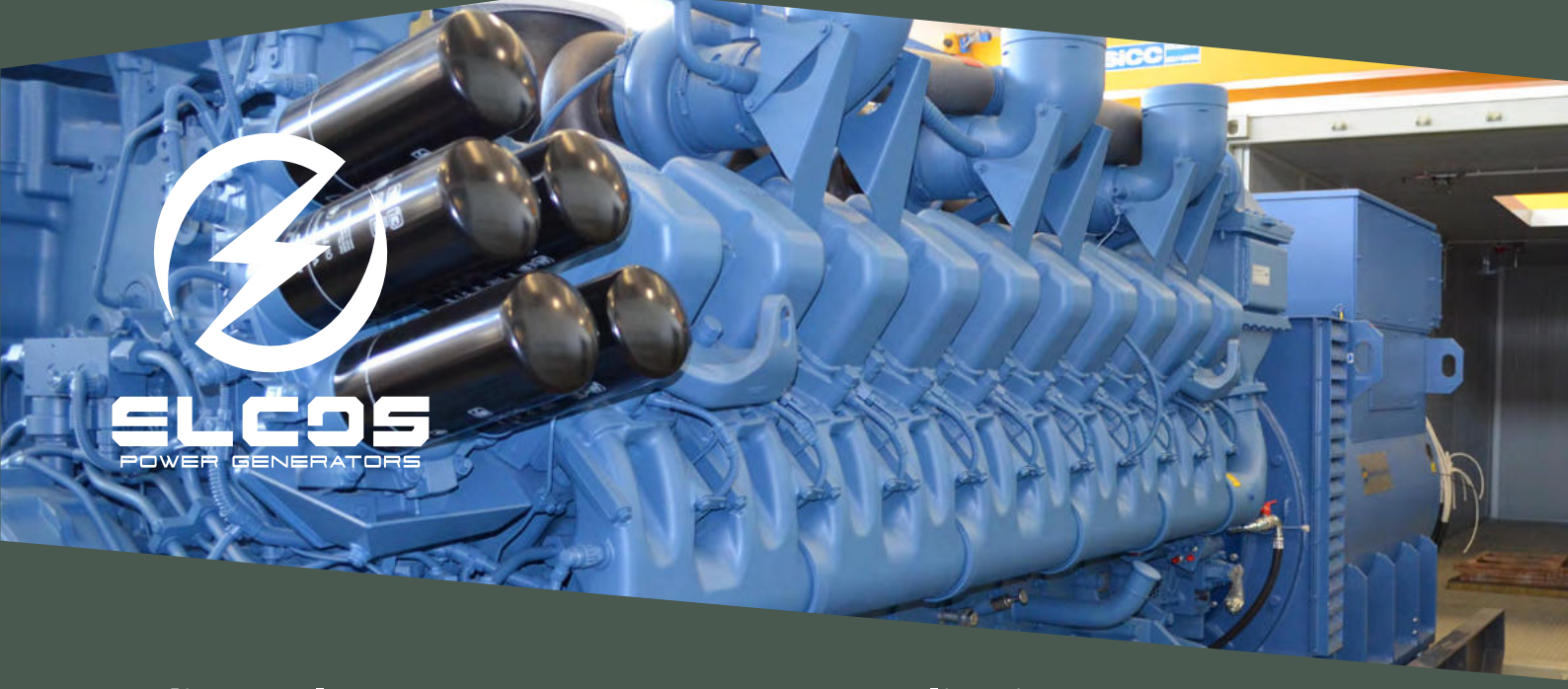

ELCOS
POWER GENERATORS

Medium Voltage power supply solutions

ELCOS GMV generators offer a reliable energy source.
Often used as a primary distribution system in auto-production installations or as a mains emergency back-up system.

The GMV range ELCOS Generators allow management in parallel, stand - alone or as master and slave modes.

The GMV range covers the reference power from 800 to 3000 KVA, equipped with premium engines and alternators brand.

Applications

These generators can be used in a variety of applications, such as:

- -Industries
- -Data Centers
- -Hospitals
- -Airports
- -Military applications
- -Telecommunications
- -Oil & Gas
- -Harbors
- -Chemicals

CE FM APPROVED QAIC/IT/91790-A RoHS 2 2011/65/EU

GMV.BF

Power range 800-3000 kVA

Diesel 1500-1800 RPM

50Hz 3.3kV - 6/6.3/6.6kV - 10/11kV

60Hz 4kV - 7.2/11.4kV - 12.4/13kV

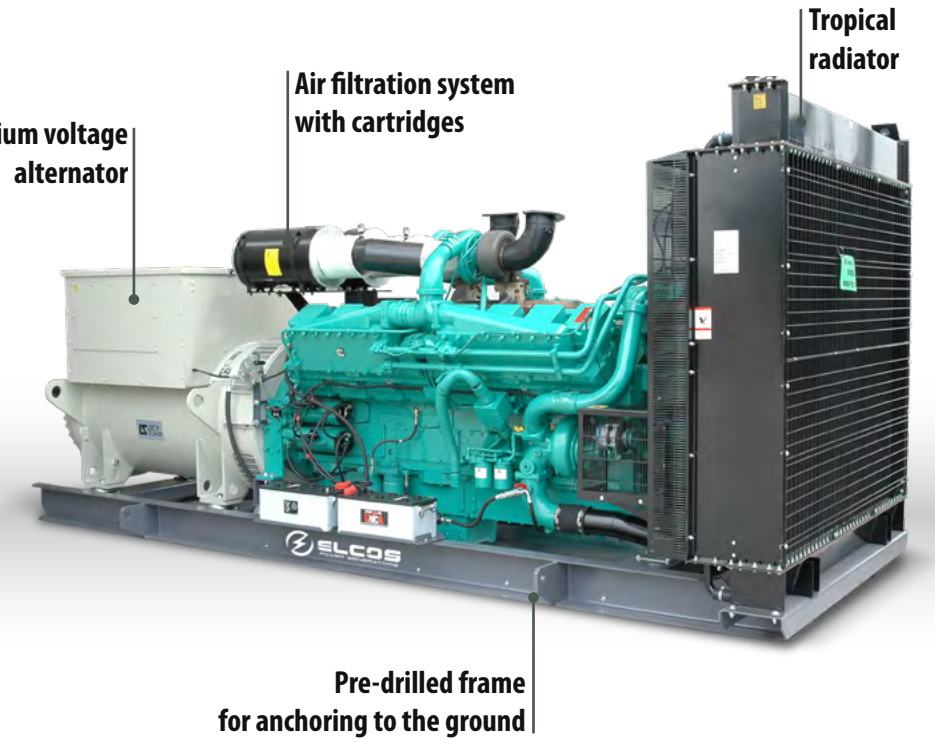



Battery holder
designed for easy maintenance and replacement



Oil change pump
it facilitates oil change



Rotating part guards
to prevent injuries to the user

QPE

POLYVALENT PANEL

Applications

- Auto-production (island)
- Emergency to the mains

MC4# evo



+011 VARIANT

Variant +011
Without integrated switching
With this variant the SWITCHING is externally managed through separate ATS panels (optional).



Wiring
excellent degree of resistance with plug in connectors



Engine heater
for easier cranking in cold environment



Lifting lugs
allow lifting of the machine



External Connectors
standard feature in models without tank



Anti-vibration pads
attenuate the vibrations caused by the unit

GMV.BF

Power range 800-3000 kVA

Diesel 1500-1800 RPM

50Hz 3.3kV - 6/6.3/6.6kV - 10/11kV

60Hz 4kV - 7.2/11.4kV - 12.4/13kV



	LTP kVA		PRP kVA									
	50 HZ	60 HZ	50 HZ	60 HZ	BRAND	CODE	COOLING	STAGE	GOVERNOR	L x W x H	WEIGHT Kg	TANK lt
800 kVA												
GMV.CU.890/800.BF	886	1000	805	910	Cummins	QSK23G3	W50°	Stage 0	E	468x167x216	6898	No Tank
GMV.MT.870/780.BF	865	-	783	-	MTU	12V 2000 G26F	W50°	Stage 0	E	460x170x210	6487	No Tank
GMV.PK.880/800.BF	880	940	800	845	Perkins	4006-23TAG3A	W50°	Stage 0	E	440x175x220	6002	No Tank
1000 kVA												
GMV.CU.1101/1001.BF	1100	-	1000	-	Cummins	KTA38G5	W50°	Stage 0	E	450x180x225	8568	No Tank
GMV.CU.1100/1000.BF	1100	1256	1000	1146	Cummins	QST30G4	W50°	Stage 0	E	420x200x235	7305	No Tank
GMV.MT.1100/1000.BF	1106	-	1005	-	MTU	16V 2000 G26F	W50°	Stage 0	E	450x200x215	7646	No Tank
GMV.PK.1130/1000.BF	1124	1125	1022	1000	Perkins	4008-TAG2A	W50°	Stage 0	E	470x175x220	7970	No Tank
1250 kVA												
GMV.CU.1390/1260.BF	1386	1610	1260	1418	Cummins	KTA50G3	W50°	Stage 0	E	520x170x240	10184	No Tank
GMV.MH.1390/1260.BF	1390	1500	1280	1350	Mitsubishi	S12R-PTA	W50°	Stage 0	E	450x200x235	11544	No Tank
GMV.MT.1370/1250.BF	1370	-	1250	-	MTU	18V 2000 G26F	W50°	Stage 0	E	520x190x255	8837	No Tank
GMV.PK.1380/1250.BF	1378	1378	1253	1253	Perkins	4012-46TWG2A	W50°	Stage 0	E	485x180x235	9660	No Tank
1400 kVA												
GMV.CU.1540/1400.BF	1540	-	1400	-	Cummins	KTA50G8	W50°	Stage 0	E	560x200x240	11209	No Tank
GMV.MH.1540/1400.BF	1520	1680	1380	1520	Mitsubishi	S12R-PTA2	W50°	Stage 0	E	450x200x235	11444	No Tank
GMV.PK.1500/1370.BF	1500	1500	1364	1364	Perkins	4012-46TWG3A	W50°	Stage 0	E	520x190x255	9778	No Tank
1500 kVA												
GMV.CU.1690/1540.BF	1690	-	1540	-	Cummins	QSK50G4	W50°	Stage 0	E	480x200x340	12323	No Tank
GMV.MH.1690/1540.BF	1650	1880	1510	1700	Mitsubishi	S12R-PTAA2	W50°	Stage 0	E	480x200x340	11752	No Tank
GMV.PK.1660/1500.BF	1656	1656	1505	1505	Perkins	4012-46TWG4A	W50°	Stage 0	E	510x230x240	10104	No Tank
1700 kVA												
GMV.MH.1900/1730.BF	1880	2000	1720	1820	Mitsubishi	S16R-PTA	W50°	Stage 0	E	530x200x260	14098	No Tank
GMV.MT.1820/1650.BF	1815	1875	1650	1700	MTU	12V 4000 G14F	W50°	Stage 0	E	500x200x250	12691	No Tank
GMV.PK.1880/1700.BF	1876	1880	1705	1710	Perkins	4012-46TAG3A	W50°	Stage 0	E	510x220x270	11915	No Tank
1900 kVA												
GMV.CU.2080/1890.BF	2079	-	1890	-	Cummins	QSK60G3	W50°	Stage 0	E	600x250x330	13906	No Tank
GMV.MH.2090/1900.BF	2080	2280	1900	2070	Mitsubishi	S16R-PTA2	W50°	Stage 0	E	530x200x255	14528	No Tank
GMV.MT.2040/1850.BF	2035	2200	1850	2000	MTU	12V 4000 G24F	W50°	Stage 0	E	500x200x250	12901	No Tank
GMV.PK.2030/1850.BF	2028	-	1844	-	Perkins	4016-61TRG1	W50°	Stage 0	E	550x250x270	13473	No Tank
2000 kVA												
GMV.CU.2240/2040.BF	2237	-	2034	-	Cummins	QSK60G4	W50°	Stage 0	E	600x250x340	14190	No Tank
GMV.MH.2200/2000.BF	-	-	-	-	Mitsubishi	S16R-PTAA2	W50°	Stage 0	E	602x215x255	14820	No Tank
GMV.MT.2300/2100.BF	2300	2500	2100	2275	MTU	16V 4000 G14F	W50°	Stage 0	E	610x230x300	14735	No Tank
GMV.PK.2265/2060.BF	2250	-	2000	-	Perkins	4016-61TRG2	W50°	Stage 0	E	600x220x255	13757	No Tank
2300 kVA												
GMV.PK.2500/2250.BF	2500	-	2250	-	Perkins	4016-61TRG3	W50°	Stage 0	E	610x230x300	14216	No Tank
GMV.MH.2500/2280.BF	2500	-	2280	-	Mitsubishi	S16R2-PTAW	W50°	Stage 0	E	610x230x300	16966	No Tank
GMV.MT.2530/2300.BF	2530	2750	2300	2500	MTU	16V 4000 G24F	W50°	Stage 0	E	610x230x300	15714	No Tank
GMV.MH.2640/2400.BF	2640	-	2400	-	Mitsubishi	S16R2-PTAW-E	W50°	Stage 0	E	610x230x300	18298	No Tank
2500 kVA												
GMV.MT.2800/2550.BF	2805	3125	2550	2813	MTU	20V 4000 G14F	W50°	Stage 0	E	665x232x278	19322	No Tank
2800 kVA												
GMV.CU.3000/2750.BF	3000	-	2750	-	Cummins	QSK78G9	W50°	Stage 0	E	650x200x275	18997	No Tank
GMV.MT.3000/2800.BF	3080	3438	2800	3125	MTU	20V 4000 G24F	W50°	Stage 0	E	650x200x275	19492	No Tank
3000 kVA												
GMV.MT.3360/3000.BF	3355	3750	3050	3450	MTU	20V 4000 G34F	W50°	Stage 0	E	650x200x275	20033	No Tank







Engine

Heavy duty air filter
Fuel/Water separator filter
Engine liquids -40 °C
Oil suction pump
Dual redundant starter motors
Super hot 230 Vac engine pre-heater
Automatic oil refilling system




Alternator

230 Vac anti-condensation heaters
RTD-PT100 probes on stator windings
PT100 probe on bearings
Temperature control unit up to 4 PT100 probes
Joint and bell housing for coupling in double-bearing alternators




Batteries

Redundant battery system
DC isolator
Maintenance free high efficiency starter batteries
24Vdc NiCd starter batteries






Exhaust

Catalytic MC converter (CAT)
Particulate filter (DPF)
Spark arrestor
Residential muffler -35 dBA
Assembly of residential muffler on board
Exhaust bellow with flexible joint

Optional








Electrical system

QPE

16-relay module

RS485 Converter LAN / USB

MASTER / SLAVE device

GSM remote management modem

Remote panel

Remote management software

WEB remote management system via LAN/GSM/GPRS with GPS

Option with QBM DSE 7320 on board

Option with QBM ComAp AMF25 on board

QP.APM Parallel panel

Automatic parallel panel with ComAp Intellivision control

Module to manage multiple units in parallel to the Mains

Transformers




Services

Factory Acceptance Test (FAT)

Vibration test




Tanks

Double wall fuel tanks with feet and tear valve

Single wall fuel tank for outdoor with bunded base and roof

External tanks and automatic fuel refilling systems

Automatic fuel refilling system with bunded base

Tanks with bunded base on trestle

Medium Voltage Parallel panel system



QMV

QMV.SWC-12KV Switching

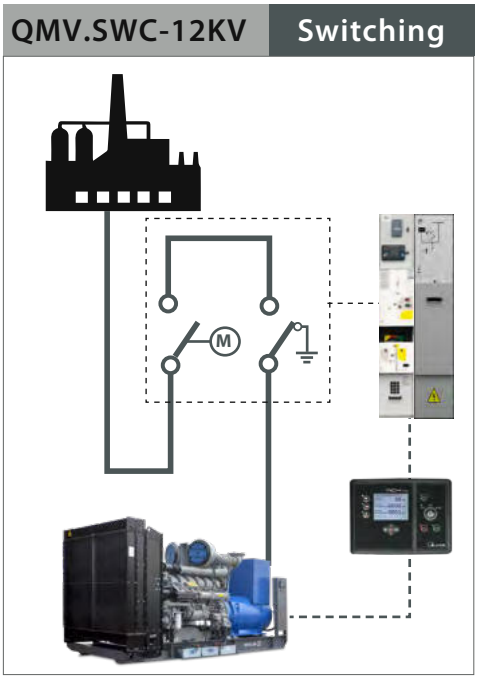

MV switchgear from 3 to 12kV with motorized vacuum switch and SF6 disconnector, Sepam S10 protection relay + cable descent module

QMV.QC-12KV-SWC-RT Commutation

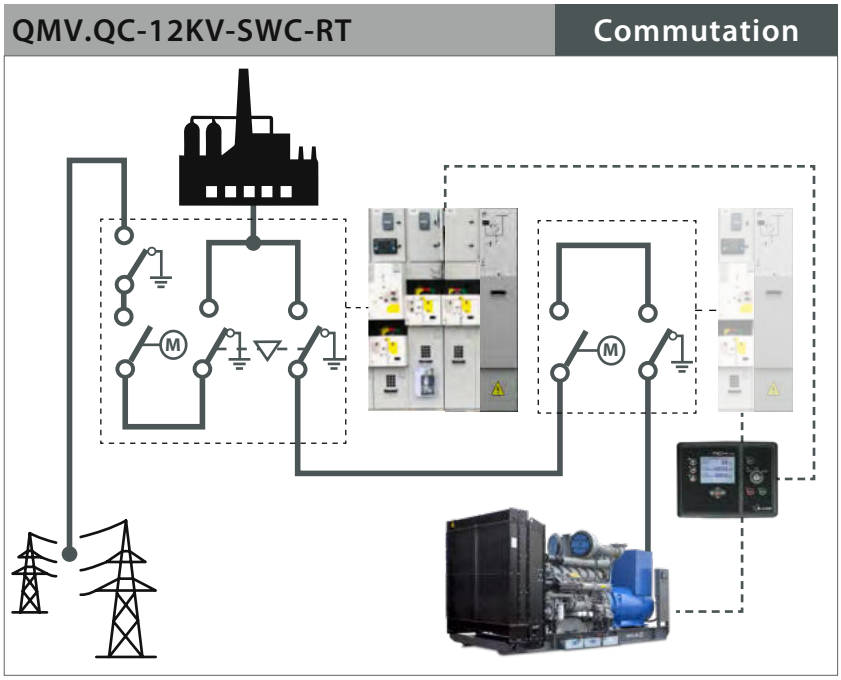

Switching panel from 3 to 12kV consisting of 2 MV switchgear with interlocked disconnectors, with mains-side protection switch, with Sepam S10 protection relay + cable descent module

QMV.QC-12KV + QMV.SWC-12KV-RT Parallel system

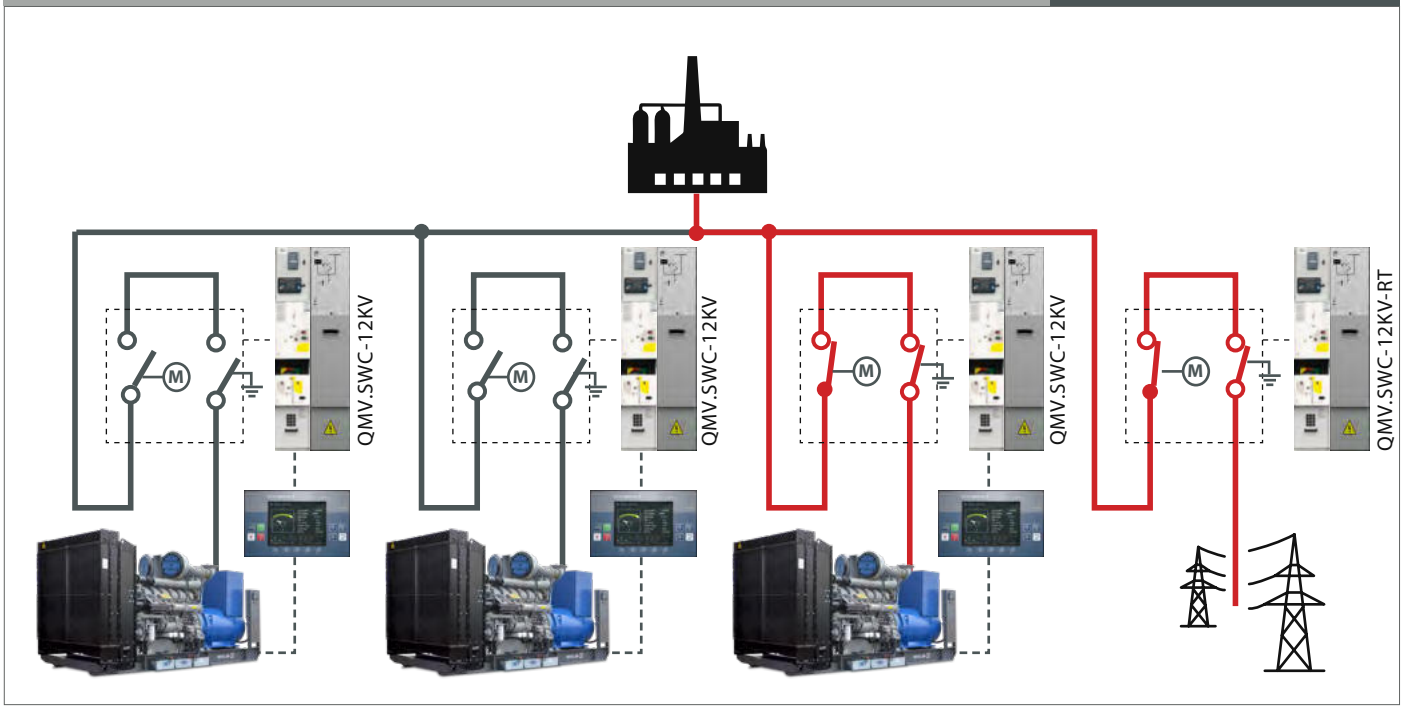

QMV.QC-12KV-SWC-HD	Commutation

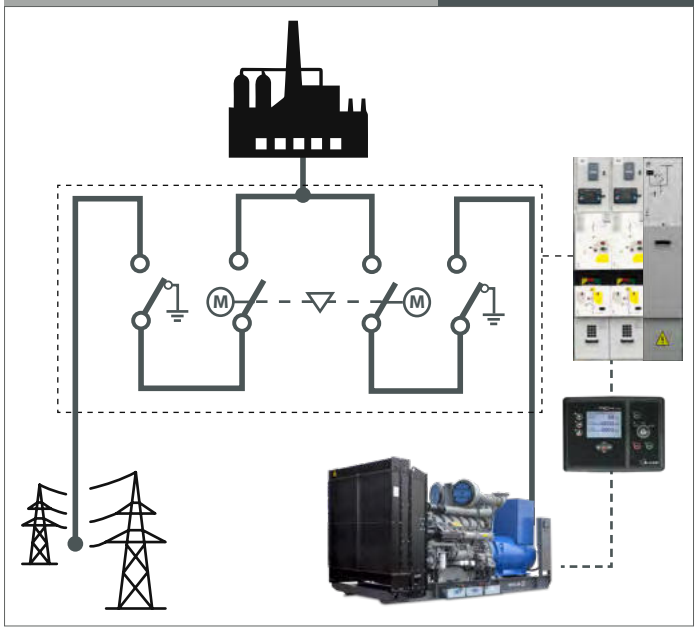

HD switching panel from 3 to 12kV composed of 2 MV switchgear with disconnectors, with interlocked motorized vacuum breaker, with Sepam S10 protection relay + cable descent module

QMV.QC-12KV	Commutation

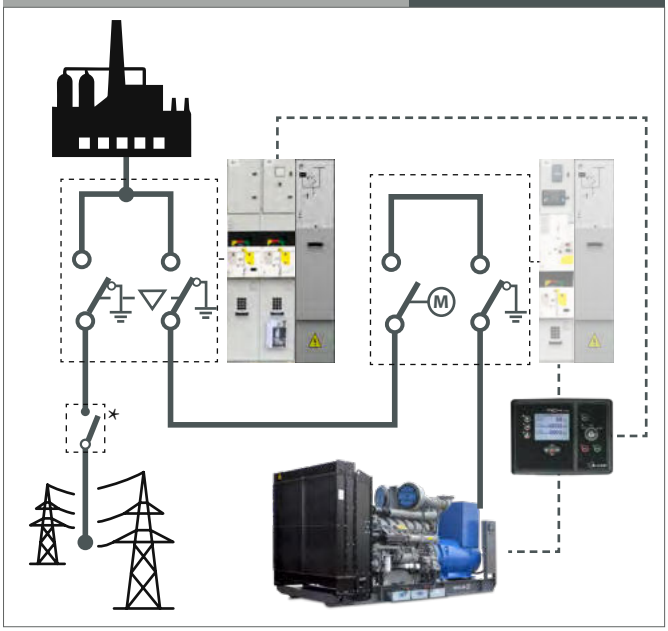

Switching panel from 3 to 12kV composed of 2 MV switchgear with interlocked disconnectors, without protection switch, without protection relay + cable descent module



QMV Optional

Installation of a single MV Panel in a container with auxiliary electrical connections (Medium Voltage Cables excluded)

Medium Voltage cables for installation up to 10 mt x 3 phases + cable headers

Sepam S20 protection relay for MV switchgear

Thytronic NA016 protection relay for MV switchgear (Italian market)



QMV.APM-GMV-SM Measurement compartment for parallel management on the MAINS side, equipped with a socket for cable entry and exit from the bottom, 3 TV for mains voltage readings

QMV.SWC-12KV-RT MV switchgear from 3 to 12kV 400A for parallel management of the network, with motorized vacuum switch and SF6 disconnector, Sepam S10 protection relay + cable descent module (it includes QP.IM-NT for more management GMV in parallel network)





CONTAINER

Iso Range 20'/20'HC - 30'/30'HC - 40'/40' HC

Access door
it allows to enter the genset room for inspection

Residential muffler -35 dBA
on the roof it guarantees an acoustic reduction of the exhaust



Air intake louvres
guarantee a suitable ventilation in all conditions

Wide opening doors 180°

Emergency devices
tear valve to stop the fuel and EPO



Tear valve
interrupts the flow of diesel fuel in the event of an emergency



Padding material
is composed of different types like class 1 micro-perforated panels



Discharge passage
allows to connect the muffler outside the engine



Electrical system
lighting and internal EMF facilitate the staff when inside

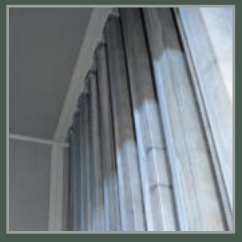

Sound-absorbing partitions
reduce the noise perceived outside



IP door gasket
it guarantees a remarkable tightness to isolate the generated noise



Air intake louvres
and special attenuators for acustic insulation



Door lock
for soundproof and tamperproof



Maintenance doors
they guarantee a comfortable inspection and maintenance

***Electrical Driven Radiator**



70 EDR* model
residential -40 dBA muffler built-in in the roof



70 EDR*model
fully removable machine, big tank on board and room forced ventilation



70 EDR*model
VSD driven fan remote radiator properly sized for the temperature



Air outlet louvres
with metal mesh to protect the expulsion from leaves/dirt





Emergency button
lever to stop the oil and EPO



Air intake louvres
guarantee a suitable ventilation in all conditions



Control & Command panel IP 55
accessible from the outside



Residential Muffler
on the roof it guarantees an acoustic reduction of the exhaust noise



Louvres
special inclined grills to protect against rain and wire anti-mouse mesh

.CONTAINER






Access

Control panel cabinet inspection door (double door)
Control panel cabinet inspection door (single door)
Panic release pushbutton for service door
Expulsion compartment walkway
Double hinged door with wide (180°) opening
Shelter above access door (for single hinged control panel)
Shelter above access door (for double hinged control panel)
Doorstop




Aspiration / Expulsion

Front vertical air outlet louvres
Vertical gravity louvres
Vertical motorized louvres
VSD driven fan remote radiator




Exhaust

External muffler with insulated casing
Internally mounted muffler






Fuel Supply

Tanks and automatic fuel refilling systems
Double wall tanks with feet and tear valve
4000/5000 Lts. tank space-optimized for containers
External refill with signal lamp
External refill with analogue level indicator
Fuel connections with 3-way valve & quick couplings
Bunded floor area with drainage to the outside
Tank installation in container with dividing fireproof wall




Certifications

Rina Certification
Atex Certification

Optional






Fire Prevention System

Fire detection kit Including thermal and optical sensors, control unit, optical and acoustic indicator, emergency button

Fire extinguishing kit with CO2 gas, including: CO2 cylinder, gas collection manifolds, distribution piping and nozzles

Fire detection and extinguishing kit

PTFE oil hoses reinforced with stainless steel sleeve









Electrical System

Installation and connection of power panel

Dedicated panel room with external access door

Cable entry from below

Outdoor container lighting

Door opening alarm system

Air extractor with ambient probe

Engine compartment electric heating kit

Automatic container temperature control system




Painting

Total custom container painting

High resistance painting for corrosive environments

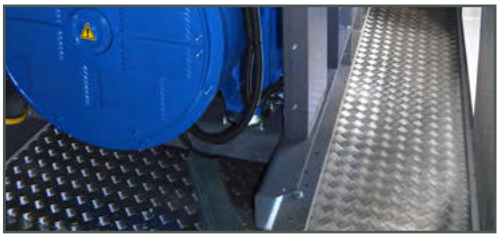

Various

Galvanized checkered floor plates, thickness 3+2 mm

Testing Rooms

TR1

Testing Room 1 from 5 to 1000 kW Certified for phonometric tests

LOW Voltage	*DC Voltage*
50 Hz **400 - 380 - 230 V** 60 Hz **480 - 240 - 208 - 220 - 277 V**	**48 VDC**






Features of Testing Room N° 1

- 607 kW x 2 automatic test with 10 load steps
- 35 kW automatic test with 10 load steps
- 10 kW automatic test in DC with 10 load steps
- Full tests with 6 PT 100 probes, 3 thermal probes
- Air flow test with anemometer
- Vibrations test
- Phonometric test
- Data registration by MODBUS

TR2

Testing Room 2 from 250 to 4000 kW

LOW Voltage	*MEDIUM Voltage*
50 Hz **400 - 380 - 230 V** 60 Hz **480 - 240 - 208 - 220 - 277 V**	50 Hz **3/3.3 - 6/6.3/6.6 -10/11 -15 kV** 60 Hz **4 - 7.2/11.4 - 12.4/13 kV**







Features of Testing Room N° 2

- 3000 kW automatic test with 20 load steps
- Multi-voltage transformer with MV cells
- Full tests with 6 PT 100 probes, 3 thermal probes
- Parallel test for up to 6 containers
- Air flow test with anemometer
- Vibrations test
- Phonometric test
- Data registration by MODBUS

About us









45
Years of experience

Company

Elcos is located in Northern Italy, in the province of Cremona. It has been operating in the domestic and international market for over forty-five years.

Elcos researches and develops products that use innovative technologies in order to optimize its production efficiency and performances provided by its systems, offering the user (from 1 to 3150 kVA) a customized product.

Elcos is an independent group that designs and produces in Italy power generation systems (emergency and self-production) intended for the international market.ELCOS has promoted an internal behavioural code based on customer satisfaction.

Product quality and customer satisfaction: the passions that guide us. The R&D department is constantly studying the possibilities of technological innovation to improve the products proposed, to explore the possibilities of new products and to improve production processes. Always focused on quality, ensuring conformity of the product and the processes according to legislation, by respecting environmental issues.
The R&D department implements existing systems and looks forward to future opportunities that can meet the needs of customers.

QAIC/IT/91790-A

Other Elcos products

GE-RB	GE-SS	GE-BF	GE-TLC	GMV-BF	NO BREAK
					
GDC-HS	**GDC-SAPS**	**GE-ECHO**	**GE-ZIP**	**TF**	**AGRIPLUS**
					

Installations/References









ELCOS
POWER GENERATORS

Service

assistenza@elcos.net
+39.0372.7233300
elcos.net/service

ELCOS SRL
Strada Statale 234 Km 58.250 -
26023 Grumello Cremonese CR - Italy
tel +39 0372 72330 - fax +39 0372 7233220
PI 01084730199
info@elcos.net - elcos@pec.elcos.net